Recessed Track

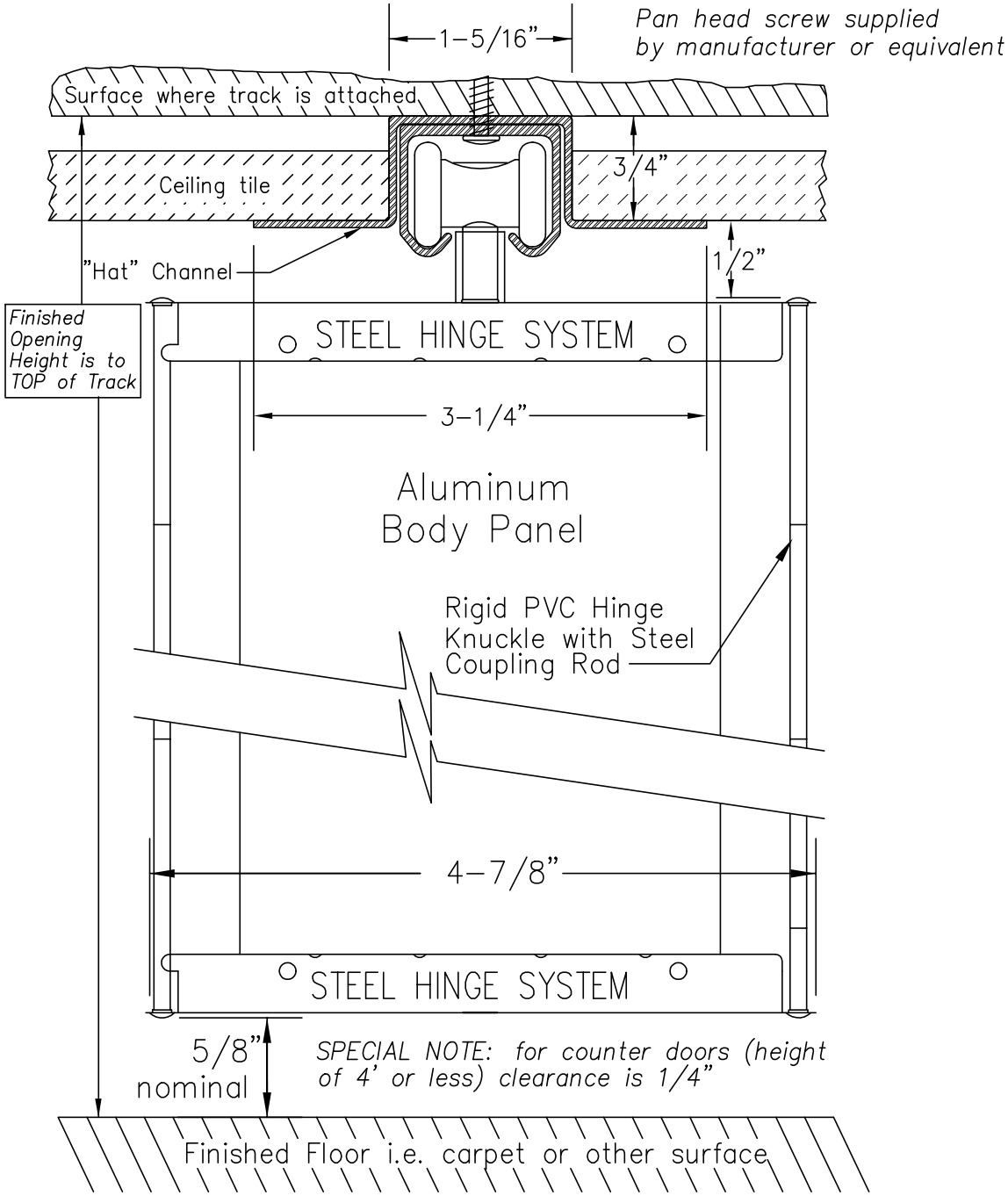

For Floor Clearance other than above please specify

CAD RETK–640

RECESSED TRACK – MODEL 640